radiantlighting

KUNDALINI

TORIC TABLE

Product name	Toric Table
Designer	Patrick Norguet
Manufacturer	Kundalini
Product code	4-K954BNEU (White/Black)
Category	Table
Material	Metal
Light source	Fluo 4 x 12W E14 (E12US) or LED 4 x 6W E14 (E12US)
Finishes	Black / White White / Orange
Dimensions	Ø 38 x 48 (H) cm
IP	20
Origin	Italy
Warranty	2 years

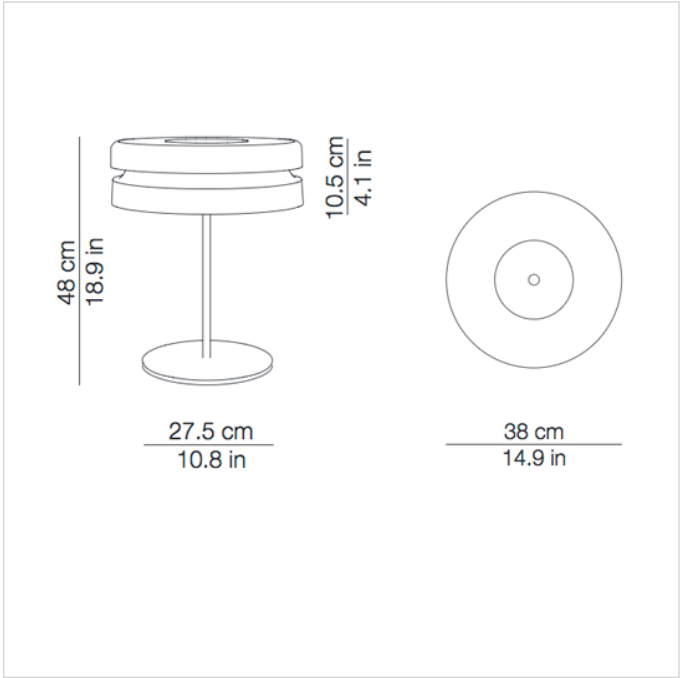

PERTH
T +61 08 9240 1008
F +61 08 9240 1178
E sales@radiantlighting.com.au

SYDNEY
T 1300 438 609
F 1300 438 610
E sydney@radiantlighting.com.au

MELBOURNE
T 1300 438 609
F 1300 438 610
E melbourne@radiantlighting.com.au

BRISBANE
T 1300 438 609
F 1300 438 610
E brisbane@radiantlighting.com.au