radiantlighting

HUNZA

STEP LITE SOLID EYELID SQUARE

Product name	Step Lite Solid Eyelid Square
Designer	Hunza
Manufacturer	Hunza
Product code	73-970 (B) 73-973 (W) 73-972 (WB) 73-974 (DG) 73-977 (MS) 73-979 (SS) 73-978 (Br) 73-971 (SC) 73-975 (316)
Category	Outdoor
Material	Solid Copper 316 Stainless Steel Power-Coated Aluminium
Light source	Halogen 1 x 35W or LED 1 x 6W
Finishes	Black White White Birch Dark Anotec Grey Bronze Silver Star Metallic Silver Solid Copper 316 Stainless Steel
Dimensions	88 (L) x 88 (W) x 68.5 (H) mm
IP	66
Origin	New Zealand
Warranty	5 years (Powder-coat finishes) 10 years (316 Stainless Steel and Copper)

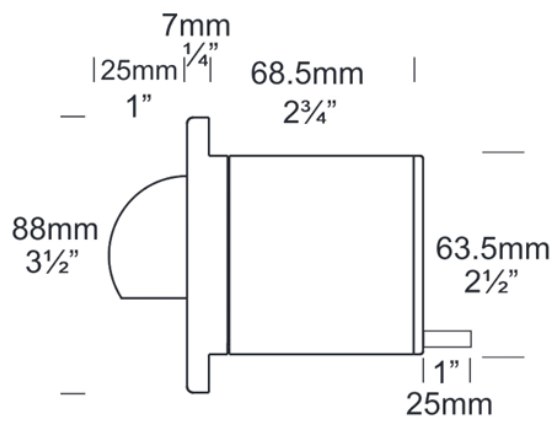

PERTH
T +61 08 9240 1008
F +61 08 9240 1178
E sales@radiantlighting.com.au

SYDNEY
T 1300 438 609
F 1300 438 610
E sydney@radiantlighting.com.au

MELBOURNE
T 1300 438 609
F 1300 438 610
E melbourne@radiantlighting.com.au

BRISBANE
T 1300 438 609
F 1300 438 610
E brisbane@radiantlighting.com.au